EVY7800AOX
EVY7800AAX
EVY7800AAV
EVY7800ZOZ

EN Microwave combi-oven

User Manual

Electrolux

CONTENTS

1. SAFETY INFORMATION....3
2. SAFETY INSTRUCTIONS....5
3. PRODUCT DESCRIPTION.... 8
4. CONTROL PANEL.... 8
5. BEFORE FIRST USE.... 10
6. DAILY USE.... 11
7. MICROWAVE MODE.... 14
8. CLOCK FUNCTIONS.... 19
9. AUTOMATIC PROGRAMMES.... 20
10. USING THE ACCESSORIES.... 21
11. ADDITIONAL FUNCTIONS.... 21
12. HINTS AND TIPS.... 23
13. CARE AND CLEANING....41
14. TROUBLESHOOTING....42
15. TECHNICAL DATA....44

WE’RE THINKING OF YOU

Thank you for purchasing an Electrolux appliance. You’ve chosen a product that brings with it decades of professional experience and innovation. Ingenious and stylish, it has been designed with you in mind. So whenever you use it, you can be safe in the knowledge that you’ll get great results every time.
Welcome to Electrolux.
Visit our website for:

Get usage advice, brochures, trouble shooter, service information:
www.electrolux.com/webselfservice

Register your product for better service:
www.registerelectrolux.com

Buy Accessories, Consumables and Original spare parts for your appliance:
www.electrolux.com/shop

CUSTOMER CARE AND SERVICE

Always use original spare parts.
When contacting our Authorised Service Centre, ensure that you have the following data available: Model, PNC, Serial Number.
The information can be found on the rating plate.

⚠ Warning / Caution-Safety information

ⓘ General information and tips

Environmental information

Subject to change without notice.

1. ⚠ SAFETY INFORMATION

Before the installation and use of the appliance, carefully read the supplied instructions. The manufacturer is not responsible for any injuries or damages that are the result of incorrect installation or usage. Always keep the instructions in a safe and accessible location for future reference.

1.1 Children and vulnerable people safety

- This appliance can be used by children aged from 8 years and above and persons with reduced physical, sensory or mental capabilities or lack of experience and knowledge if they have been given supervision or instruction concerning the use of the appliance in a safe way and understand the hazards involved.
- Do not let children play with the appliance.
- Keep all packaging away from children and dispose of it appropriately.
- Keep children and pets away from the appliance when it operates or when it cools down. Accessible parts are hot.
- If the appliance has a child safety device, this should be activated.
- Children shall not carry out cleaning and user maintenance of the appliance without supervision.
- Children aged 3 years and under must be kept away from this appliance when it is in operation at all times.

1.2 General Safety

- Only a qualified person must install this appliance and replace the cable.
- WARNING: The appliance and its accessible parts become hot during use. Care should be taken to avoid touching heating elements. Children less than 8 years of age shall be kept away unless continuously supervised.

- Always use oven gloves to remove or put in accessories or ovenware.
- Before maintenance cut the power supply.
- Ensure that the appliance is switched off before replacing the lamp to avoid the possibility of electric shock.
- Do not use a steam cleaner to clean the appliance.
- Do not use harsh abrasive cleaners or sharp metal scrapers to clean the glass door since they can scratch the surface, which may result in shattering of the glass.
- If the mains power supply cable is damaged, it must be replaced by the manufacturer, its Authorised Service Centre or similarly qualified persons to avoid an electrical hazard.
- Do not activate the appliance when it is empty. Metal parts inside the cavity can create electric arcing.
- Metallic containers for food and beverages are not allowed during microwave cooking. This requirement is not applicable if the manufacturer specifies size and shape of metallic containers suitable for microwave cooking.
- If the door or door seals are damaged, the appliance must not be operated until it has been repaired by a qualified person.
- Only a qualified person can carry out any service or repair operation that involves the removal of a cover which gives protection against exposure to microwave energy.
- Do not heat liquids and other foods in sealed containers. They are liable to explode.
- Only use utensils that are suitable for use in microwave ovens.
- When heating food in plastic or paper containers, keep an eye on the appliance due to the possibility of ignition.

- The appliance is intended for heating food and beverages. Drying of food or clothing and heating of warming pads, slippers, sponges, damp cloth and similar may lead to risk of injury, ignition or fire.
- If smoke is emitted, switch off or unplug the appliance and keep the door closed in order to stifle any flames.
- Microwave heating of beverages can result in delayed eruptive boiling. Care must be taken when handling the container.
- The contents of feeding bottles and baby food jars shall be stirred or shaken and the temperature checked before consumption, in order to avoid burns.
- Eggs in their shell and whole hard-boiled eggs should not be heated in the appliance since they may explode, even after microwave heating has ended.
- The appliance should be cleaned regularly and any food deposits removed.
- Failure to maintain the appliance in a clean condition could lead to deterioration of the surface that could adversely affect the life of the appliance and possibly result in a hazardous situation.

2. SAFETY INSTRUCTIONS

2.1 Installation

WARNING!
Only a qualified person must install this appliance.

- Remove all the packaging.
- Do not install or use a damaged appliance.
- Follow the installation instruction supplied with the appliance.
- Always take care when moving the appliance as it is heavy. Always use safety gloves and enclosed footwear.
- Do not pull the appliance by the handle.
- Keep the minimum distance from the other appliances and units.
- Make sure that the appliance is installed below and adjacent safe structures.
- The sides of the appliance must stay adjacent to appliances or to units with the same height.

2.2 Electrical connection

WARNING!
Risk of fire and electrical shock.

- All electrical connections should be made by a qualified electrician.
- The appliance must be earthed.
- Make sure that the electrical information on the rating plate agrees with the power supply. If not, contact an electrician.
- Always use a correctly installed shockproof socket.
- Do not use multi-plug adapters and extension cables.

- Make sure not to cause damage to the mains plug and to the mains cable. Should the mains cable need to be replaced, this must be carried out by our Authorised Service Centre.
- Do not let mains cables touch or come near the appliance door, especially when the door is hot.
- The shock protection of live and insulated parts must be fastened in such a way that it cannot be removed without tools.
- Connect the mains plug to the mains socket only at the end of the installation. Make sure that there is access to the mains plug after the installation.
- If the mains socket is loose, do not connect the mains plug.
- Do not pull the mains cable to disconnect the appliance. Always pull the mains plug.
- Use only correct isolation devices: line protecting cut-outs, fuses (screw type fuses removed from the holder), earth leakage trips and contactors.
- The electrical installation must have an isolation device which lets you disconnect the appliance from the mains at all poles. The isolation device must have a contact opening width of minimum 3 mm.
- This appliance complies with the E.E.C. Directives.

2.3 Use

WARNING!
Risk of injury, burns and electrical shock or explosion.

- This appliance is for household use only.
- Do not change the specification of this appliance.
- Make sure that the ventilation openings are not blocked.
- Do not let the appliance stay unattended during operation.
- Deactivate the appliance after each use.
- Be careful when you open the appliance door while the appliance is in operation. Hot air can release.
- Do not operate the appliance with wet hands or when it has contact with water.
- Do not apply pressure on the open door.
- Do not use the appliance as a work surface or as a storage surface.
- Open the appliance door carefully. The use of ingredients with alcohol can cause a mixture of alcohol and air.
- Do not let sparks or open flames to come in contact with the appliance when you open the door.
- Do not put flammable products or items that are wet with flammable products in, near or on the appliance.
- Do not use microwave function to preheat the oven.

WARNING!
Risk of damage to the appliance.

- To prevent damage or discoloration to the enamel:
  - do not put aluminium foil directly on the bottom of the appliance.
  - do not put water directly into the hot appliance.
  - do not keep moist dishes and food in the appliance after you finish the cooking.
  - be careful when you remove or install the accessories.
- Discoloration of the enamel has no effect on the performance of the appliance.
- Use a deep pan for moist cakes. Fruit juices cause stains that can be permanent.
- This appliance is for cooking purposes only. It must not be used for other purposes, for example room heating.
- Always cook with the oven door closed.
- If the appliance is installed behind a furniture panel (e.g. a door) make sure the door is never closed when the appliance is in operation. Heat and moisture can build up behind a closed furniture panel and cause subsequent damage to the appliance, the housing unit or the floor. Do not

close the furniture panel until the appliance has cooled down completely after use.

2.4 Care and cleaning

WARNING!
Risk of injury, fire, or damage to the appliance.

- Before maintenance, deactivate the appliance and disconnect the mains plug from the mains socket.
- Make sure the appliance is cold. There is the risk that the glass panels can break.
- Replace immediately the door glass panels when they are damaged. Contact the Authorised Service Centre.
- Make sure the cavity and the door are wiped dry after each use. Steam produced during the operation of the appliance condensates on cavity walls and can cause corrosion.
- Clean regularly the appliance to prevent the deterioration of the surface material.
- Fat and food remaining in the appliance can cause fire and electric arcing when the microwave function operates.
- Clean the appliance with a moist soft cloth. Only use neutral detergents. Do not use any abrasive products, abrasive cleaning pads, solvents or metal objects.
- If you use an oven spray, obey the safety instructions on the packaging.
- Do not clean the catalytic enamel (if applicable) with any kind of detergent.

2.5 Internal light

- The type of light bulb or halogen lamp used for this appliance is only for household appliances. Do not use it for house lighting.

WARNING!
Risk of electrical shock.

- Before replacing the lamp, disconnect the appliance from the power supply.
- Only use lamps with the same specifications.

2.6 Disposal

WARNING!
Risk of injury or suffocation.

- Disconnect the appliance from the mains supply.
- Cut off the mains electrical cable close to the appliance and dispose of it.
- Remove the door catch to prevent children or pets from becoming trapped in the appliance.

2.7 Service

- To repair the appliance contact an Authorised Service Centre.
- Use original spare parts only.

3. PRODUCT DESCRIPTION

3.1 General overview

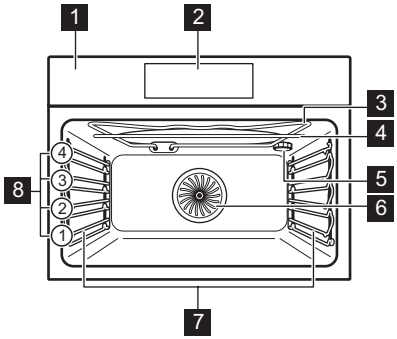

1 Control panel
2 Electronic programmer
3 Heating element
4 Microwave generator
5 Lamp
6 Fan
7 Shelf support, removable
8 Shelf positions

3.2 Accessories

Wire shelf

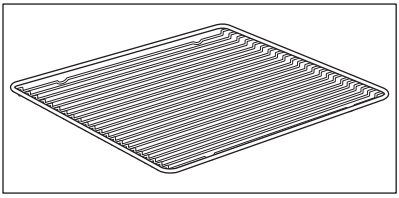

For cookware, cake tins, roasts.

Baking tray

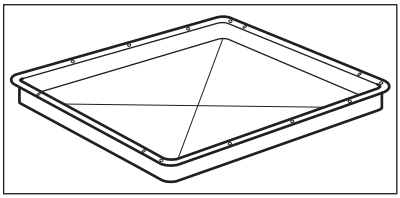

For cakes and biscuits.

4. CONTROL PANEL

4.1 Electronic programmer

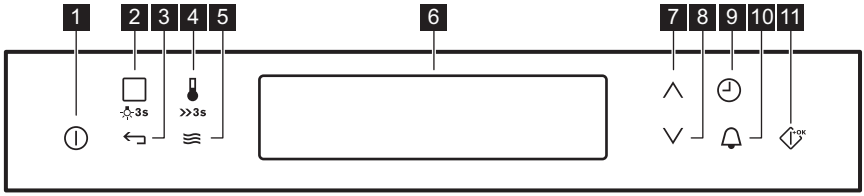

Use the sensor fields to operate the appliance.
If they are not visible touch ⏻ to activate them.

	Sensor field	Function	Comment
1		ON / OFF	To activate and deactivate the appliance.
2	3s	Heating Functions or Assisted Cooking	Touch the sensor field once to choose a heating function or the menu: Assisted Cooking. Touch the sensor field again to switch between the menus: Heating Functions, Assisted Cooking. To activate or deactivate the light, touch the field for 3 seconds.
3		Back key	To go back one level in the menu. To show the main menu, touch the field for 3 seconds.
4	>>3s	Temperature selection	To set the temperature or show the current temperature in the appliance. Touch the field for 3 seconds to activate or deactivate the function: Fast heat up.
5		Microwave function	To activate the Microwave function. When you use the Microwave function with the function: Duration for more than 7 minutes and in Combi mode, the Microwave power cannot be more than 600 W.
6	-	Display	Shows the current settings of the appliance.
7		Up key	To move up in the menu.
8		Down key	To move down in the menu.
9		Time and additional functions	To set different functions. When a heating function operates, touch the sensor field to set the timer or the functions: Function Lock, Favourite Programme, Heat + Hold, Set + Go.
10		Minute Minder	To set the function: Minute Minder.
11	+OK	OK / Microwave Quick Start	To confirm the selection or settings. To activate the Microwave function. You can use it when the appliance is deactivated.

4.2 Display

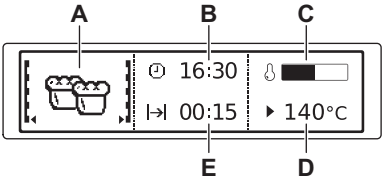

A. Heating function or Microwave function
B. Time of day
C. Heat-up indicator
D. Temperature or power of the microwave
E. Duration time or end time of a function

Other indicators of the display:

Symbol		Function
	Minute Minder	The function operates.
	Time of day	The display shows the current time.
	Duration	The display shows the necessary time for cooking.
	End Time	The display shows when the cooking time is complete.
	Temperature	The display shows the temperature.
	Time Indication	The display shows how long the heating function operates. Press ∨ and ∧ at the same time to reset the time.
	Heat-up Indicator	The display shows the temperature in the appliance.
	Fast Heat Up Indicator	The function is active. It decreases the heat up time.
	Weight Automatic	The display shows that the automatic weight system is active or that weight can be changed.
	Heat + Hold	The function is active.

5. BEFORE FIRST USE

WARNING!
Refer to Safety chapters.

5.1 Initial Cleaning

Remove all accessories and removable shelf supports from the appliance.

Refer to "Care and cleaning" chapter.

Clean the appliance and the accessories before first use.

Put the accessories and the removable shelf supports back to their initial position.

5.2 First Connection

When you connect the appliance to the mains or after the power cut, you have to

set the language, the display contrast, the display brightness and the time of the day.

1. Press ∧ or ∨ to set the value.
2. Press OK to confirm.

6. DAILY USE

WARNING!
Refer to Safety chapters.

6.1 Navigating the menus

1. Activate the appliance.
2. Press ∨ or ∧ to select the menu option.
3. Press OK to move to the submenu or accept the setting.

At each point you can go back to the main menu with ↩.

6.2 The menus in overview

Main menu

Symbol	Menu item	Application
	Heating Functions	Contains a list of heating functions.
	Assisted Cooking	Contains a list of automatic programmes.
	Favourite Programme	Contains a list of favourite cooking programmes created by the user.
	Basic Settings	Used to set other settings.
	Specials	Contains a list of additional heating functions.

Submenu for: Basic Settings

Symbol	Submenu	Description
	Set Time of Day	Sets the current time on the clock.
	Time Indication	When ON, the display shows the current time when you deactivate the appliance.
	Set + Go	To set a function and activate it later with a press of any symbol on the control panel.
	Heat + Hold	Keeps the prepared food warm for 30 minutes after a cooking cycle finished.
	Extra Time	Activates and deactivates the time extension function.
	Display Contrast	Adjusts the display contrast by degrees.
	Display Brightness	Adjusts the display brightness by degrees.

Sym-bol	Submenu	Description
	Set Language	Sets the language for the display.
	Buzzer Volume	Adjusts the volume of press-tones and signals by degrees.
	Key Tones	Activates and deactivates the tone of the touch fields. It is not possible to deactivate the tone of the ON / OFF touch field.
	Alarm/Error Tones	Activates and deactivates the alarm tones.
i	Service	Shows the software version and configuration.
	Factory Settings	Resets all settings to factory settings.

6.3 Heating Functions

Heating function		Application
	True Fan Cooking	To bake on up to two shelf positions at the same time and to dry food. Set the temperature 20 - 40 °C lower than for the function: Conventional Cooking.
	Pizza Setting	To bake food on one shelf position for a more intensive browning and a crispy bottom. Set the temperature 20 - 40 °C lower than for the function: Conventional Cooking.
	Conventional Cooking	To bake and roast food on one shelf position.
	Slow Cooking	To prepare tender, succulent roasts.
	Bottom Heat	To bake cakes with crispy bottom and to preserve food.
	ECO Roasting	When you use this function during cooking, it allows you to optimize the energy consumption. To get more information about the recommended settings, refer to the cooking tables with the equivalent function (Turbo Grilling).
	Frozen Foods	To make convenience food like e.g. french fries, potato wedges or spring rolls crispy.
	Grilling	To grill flat food and to toast bread.

Heating function		Application
	Fast Grilling	To grill flat food in large quantities and to toast bread.
	Turbo Grilling	To roast larger meat joints or poultry with bones on one shelf position. Also to make gratins and to brown.

The lamp may automatically deactivate at a temperature below 60 °C during some oven functions.

6.4 Specials

Heating function		Application
	Bread Baking	To bake bread.
	Au Gratin	For dishes such as lasagna or potato gratin. Also to gratinate and brown.
	Dough Proving	For controlled rising of yeast dough before baking.
	Plate Warming	To preheat plates for serving.
	Preserving	To make vegetable preserves such as pickles.
	Drying	To dry sliced fruit (e.g. apples, plums, peaches) and vegetables (e.g. tomatoes, zucchini, mushrooms).
	Keep Warm	To keep food warm.
	Defrost	This function can be used for defrosting frozen foods, such as vegetables and fruits. The defrosting time depends on the amount and size of the frozen food.

6.5 Activating a heating function

1. Activate the appliance.
2. Select the menu: Heating Functions.
3. Press OK to confirm.
4. Select a heating function.
5. Press OK to confirm.
6. Set the temperature.
7. Press OK to confirm.

6.6 Heat-up indicator

When you activate a heating function, the bar on the display comes on. The bar shows that the temperature increases. When temperature is reached the buzzer sounds 3 times and the bar flashes and then disappears.

6.7 Fast Heat Up Indicator

This function decreases the heat-up time.

Do not put food in the oven when the Fast heat up function operates.

To activate the function, hold for 3 seconds. The heat-up indicator alternates.

6.8 Residual heat

When you deactivate the appliance, the display shows the residual heat. You can use the heat to keep the food warm.

6.9 Energy saving

The appliance contains features which help you save energy during everyday cooking.

General hints
Make sure that the oven door is closed properly when the appliance operates and keep it closed as much as possible during the cooking.

Use metal dishes to improve energy saving, but only when you use a non-microwave function.

When possible, do not preheat the oven before you put the food inside.

When the cooking duration is longer than 30 minutes, reduce the oven temperature to minimum 3 - 10 minutes before the end of the cooking time, depending on the duration of the cooking. The residual heat inside the oven will continue to cook.

Use the residual heat to warm up other dishes.

Cooking with fan
When possible, use the cooking functions with fan to save energy.

Residual heat
If a programme with the Duration or End Time selection is activated and the cooking time is longer than 30 minutes, the heating elements deactivate automatically 10% faster in some oven functions.

The fan and lamp continue to operate.

Keep food warm
Choose the lowest possible temperature setting to use residual heat and keep a meal warm. The display shows the residual heat indicator or temperature.

Cooking with the lamp off
Deactivate the lamp during cooking and activate only when you need it.

7. MICROWAVE MODE

7.1 Microwave

General:

CAUTION!
Do not let the appliance operate when there is no food in it.

- After you deactivate the appliance, let the food stand for some minutes. Refer to the microwave cooking tables: standing time.
- Remove the aluminium foil packaging, metal containers, etc. before you prepare the food.
- It is not recommended to use more than one level when using the microwave mode.
- Put the food on a plate on the bottom of the cavity if not specified differently.
- If possible, always stir the food before serving.

Cooking:

- If possible, cook food covered with material suitable for use in the

microwave. Only cook food without a cover if you want to keep a crust.
- Do not overcook the dishes by setting the power and time too high. The food can dry out, burn or catch fire in some places.
- Do not use the appliance to cook eggs in their shells and snails, because they can burst. With fried eggs, pierce the yolks first.
- Pierce skin or peel of potatoes, tomatoes, sausages and similar types of food with a fork several times before cooking so that the food does not burst.
- For chilled or frozen food, set a longer cooking time.
- Dishes which contain sauce must be stirred from time to time.
- Turn larger pieces of food after half the cooking time.
- If possible, cut vegetables into similar-sized pieces.
- Use flat, wide dishes.
- Do not use cookware made of porcelain, ceramic or earthenware with unglazed bottoms or small holes, e.g. on handles . Moisture going into the holes can cause the cookware to crack when it is heated.

Defrosting meat, poultry, fish:

- Put the frozen, unwrapped food on a small upturned plate with a container below it, or on a defrosting rack or plastic sieve so that the defrosting liquid can run off.
- Turn the food after half the defrosting time. If possible, divide and then remove the pieces that have started to defrost.

Defrosting butter, portions of gateau, quark:

- Do not fully defrost in the appliance, but let them defrost completely at a room temperature. This gives a more even result. Remove all metal or aluminium packaging or parts before defrosting.

Defrosting fruit, vegetables:

- If fruit and vegetables should remain raw, do not defrost them fully in the appliance but let them defrost completely at a room temperature.
- To cook fruit and vegetables without defrosting them first, you can use a higher microwave power.

Ready meals:

- Ready meals in metal packaging or plastic trays with metal covers can only be defrosted or heated in the microwave if they are expressively designated as suitable for use in the microwave.
- You must follow the manufacturer's instructions printed on the packaging (e.g. remove the metal cover and pierce the plastic film).

7.2 Suitable cookware and materials

Cookware / Material	Microwave			Grilling ♥♥♥♥
	Defrosting	Heating	Cooking	
Ovenproof glass and porcelain with no metal components, e.g. Pyrex, heat-proof glass	✓	✓	✓	✓
Non-ovenproof glass and porcelain[1)]	✓	X	X	X
Grill shelf, glass and glass ceramic made of ovenproof / frost-proof material e.g. Arcoflam	✓	✓	✓	✓

Cookware / Material	Microwave			Grilling
	Defrosting	Heating	Cooking	
Ceramic[2], earthenware[2]	✓	✓	✓	X
Heat-resistant plastic up to 200 °C[3]	✓	✓	✓	X
Cardboard, paper	✓	X	X	X
Clingfilm	✓	X	X	X
Roasting film with microwave safe closure[3]	✓	✓	✓	X
Roasting dishes made of metal, e.g. enamel, cast iron	X	X	X	✓
Baking tins, black lacquer or silicon-coated[3]	X	X	X	✓
Baking tray	X	X	X	✓
Wire shelf	X	X	X	✓
Browning cookware, e.g. crisp pan or crunch plate	X	✓	✓	X
Ready meals in packaging[3]	✓	✓	✓	✓

1) With no silver, gold, platinum or metal plating / decorations.

2) Without quartz or metal components, or glazes which contain metals

3) You must follow the manufacturer's instructions about the maximum temperatures.

7.3 Tips for the microwave

Result	Remedy
You cannot find details for the amount of food prepared.	Find details for similar type of food. Increase or shorten the length of the cooking time according to the following rule: double the amount - almost double the time, half the amount - half the time.
The food after cooking is too dry.	Set shorter cooking time or select lower microwave power and cover with material suitable for use in the microwave.
The food is still not defrosted, hot or cooked after the end of cooking time .	Set longer cooking time or select higher microwave power. Note that taller dishes generally need longer cooking time. Stir or turn food during cooking.

Result	Remedy
After the end of cooking time the food is overheated at the edges but is still not ready in the middle.	Next time select a lower power and a longer time. Stir liquids, such as soup, halfway through.

Other things to think about…

- Food items have different shapes and qualities. They are prepared in different quantities. Because of this, the necessary time and power for defrosting, heating or cooking can vary. As a rough guide: **double the quantity - almost double the time.**
- The microwave creates the heat directly in the food. Because of this, all places cannot be heated at the same time. You must stir or turn the heated dishes, especially when preparing larger quantities of food.
- The **standing time** is given in the tables. Let the food stand, in the appliance or outside it, so that the heat is distributed more evenly.
- Adjust the power level according to food quantity. Using high power level with small amount of food can burn the food or generate arcing when you use the accessories.
- You get better results for rice if you use flat, wide dishes.

7.4 Microwave functions

Functions	Description
Microwave	Creates the heat directly in the food. Use it to heat pre-prepared meals and drinks, to defrost meat or fruit, and to cook vegetables and fish.
Combi	Use it to operate the heating function and the microwave mode together. Use it to cook food in a shorter time and brown it simultaneously. The maximum power for this function is 600 W
Quick Start	Use it to activate the Microwave function with one touch of the symbol OK with the maximum microwave power. Operating time: 30 seconds.

7.5 Setting the Microwave function

1. Activate the appliance.
2. Touch to activate the Microwave function.
3. Touch OK. The function: Duration is set to 30 seconds and the microwaves starts to operate.

Each touch of OK adds 30 seconds to the time of the function: Duration.

If you do not touch OK, the appliance deactivates after 20 seconds.

4. Touch to set the function: Duration. Refer to "Setting the clock functions".

When the time of the function: Duration is longer than 7 minutes the Microwave power is decreased to 600 W.

The maximum setting of the time for the function: Duration is 90 minutes.

You can change the microwave power (touch ≋ and then ∨ or ∧) and the function: Duration ◷ any time when the Microwave function operates.

5. When the set time ends, an acoustic signal sounds for 2 minutes. The Microwave function deactivates automatically. Touch any symbol to stop the acoustic signal.

To deactivate the Microwave function, touch ⏻.

If you touch ≋ or open the door, the function stops. To start it again, touch OK.

7.6 Setting the Combi function

1. Activate a heating function. Refer to "Activating a heating function".
2. Touch ≋ and do the same steps as when you set the Microwave function.

For some functions the microwave will start as soon as the set temperature is reached.

Functions not available for the Combi function: Favourite Programme, End Time, Set + Go, Heat + Hold.

7.7 Setting the Quick Start function

1. If necessary, touch ⏻ to deactivate the appliance.
2. Touch OK to activate the Quick Start function.

Each touch of OK adds 30 seconds to the Duration time.

You can change the microwave power (refer to "Setting the Microwave function").

3. Touch ◷ to set the time for the function: Duration. Refer to "Setting the clock functions".

7.8 Examples of cooking applications for power settings

The data in the table is for guidance only.

Power setting	Use
• 1000 Watt • 900 Watt • 800 Watt • 700 Watt	Heating liquids Searing at the start of the cooking process Cooking vegetables Melting gelatine and butter
• 600 Watt • 500 Watt	Defrosting and heating frozen meals Heating one-plate meals Simmering stews Cooking egg dishes
• 400 Watt • 300 Watt • 200 Watt	Continuing to cook meals Cooking delicate food Heating baby food Simmering rice Heating delicate food Melting cheese

Power setting	Use
• 100 Watt	Defrosting meat, fish, bread Defrosting cheese, cream, butter Defrosting fruit and cakes (gateaux) Raising yeast dough Heating up cold dishes and drinks

8. CLOCK FUNCTIONS

8.1 Clock functions table

Clock function		Application
	Minute Minder	To set a countdown (max. 2 h 30 min). This function has no effect on the operation of the appliance. Use to activate the function. Press or to set the minutes and to start.
	Duration	To set the length of an operation (max. 23 h 59 min).
	End Time	To set the switch-off time for a heating function (max. 23 h 59 min).

If you set the time for a clock function, the time starts to count down after 5 seconds.

If you use the clock functions: Duration, End Time, the appliance deactivates the heating elements after 90 % of the set time. The appliance uses the residual heat to continue the cooking process until the time ends (3 - 20 minutes).

8.2 Setting the clock functions

Before you use the functions: Duration, End Time, you must set a heating function and temperature first. The appliance deactivates automatically.
You can use the functions: Duration and End Time at the same time if you want to automatically activate and deactivate the appliance on a given time later.

1. Set a heating function.
2. Press again and again until the display shows the necessary clock function and the related symbol.
3. Press or to set the necessary time.
4. Press to confirm.

When the time ends, an acoustic signal sounds. The appliance deactivates. The display shows a message.

5. Press any symbol to stop the signal.

8.3 Heat + Hold

Conditions for the function:

- The set temperature is more than 80 °C.
- The function: Duration is set.

The function: Heat + Hold keeps prepared food warm at 80 °C for 30 minutes. It activates after the baking or roasting procedure ends.

You can activate or deactivate the function in the menu: Basic Settings.

1. Activate the appliance.
2. Select the heating function.
3. Set the temperature above 80 °C.
4. Press ⏲ again and again until the display shows: Heat + Hold.
5. Press OK to confirm.

When the function ends, an acoustic signal sounds.

The function stays on if you change the heating functions.

8.4 Extra Time

The function: Extra Time makes the heating function continue after the end of Duration.

Applicable to all heating functions with Duration or Weight Automatic.

1. When the cooking time ends, an acoustic signal sounds. Press any symbol.

The display shows the message.

2. Press ⏲ to activate or ↩ to cancel.
3. Set the length of the function.
4. Press OK.

9. AUTOMATIC PROGRAMMES

WARNING!
Refer to Safety chapters.

9.1 Recipes online

You can find the recipes for the automatic programmes specified for this appliance on our website. To find the proper Recipe Book check the PNC number on the rating plate on the front frame of the appliance cavity.

9.2 Assisted Cooking with Recipe Automatic

This appliance has a set of recipes you can use. The recipes are fixed and you cannot change them.

1. Activate the appliance.
2. Select the menu: Assisted Cooking. Press OK to confirm.
3. Select the category and dish. Press OK to confirm.
4. Select a recipe. Press OK to confirm.

When you use the function: Manual, the appliance uses the automatic settings. You can change them as with other functions.

9.3 Assisted Cooking with Weight Automatic

This function automatically calculates the roasting time. To use it, it is necessary to input the food weight.

1. Activate the appliance.
2. Select the menu: Assisted Cooking. Press OK to confirm.
3. Select the category and dish. Press OK to confirm.
4. Touch ∧ or ∨ to set the food weight. Press OK to confirm.

The automatic programme starts.

5. You can change the weight at any time. Press ∧ or ∨ to change the weight.

6. When the time ends, an acoustic signal sounds. Press any symbol to deactivate the signal.

With some programmes turn over the food after 30 minutes. The display shows a reminder.

10. USING THE ACCESSORIES

WARNING!
Refer to Safety chapters.

10.1 Inserting the accessories

Use only suitable cookware and material.

WARNING!
Refer to "Microwave mode" chapter.

Wire shelf:

Push the shelf between the guide bars of the shelf support and make sure that the feet point down.

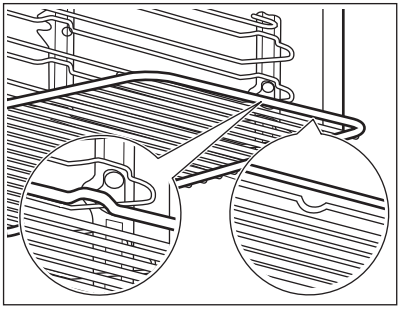

Baking tray:

Push the baking tray between the guide bars of the shelf support.

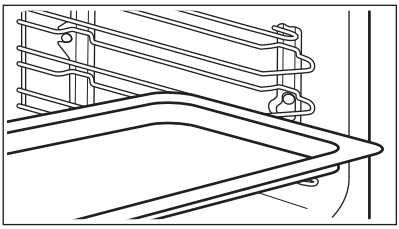

Wire shelf and baking tray together:

Push the baking tray between the guide bars of the shelf support and the wire shelf on the guide bars above.

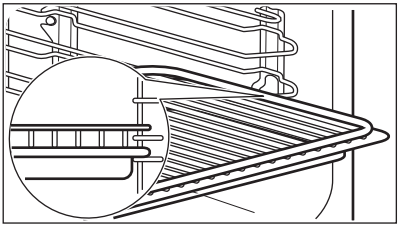

Small indentation at the top increase safety. The indentations are also anti-tip devices. The high rim around the shelf prevents cookware from slipping of the shelf.

11. ADDITIONAL FUNCTIONS

11.1 Favourite Programme

You can save your favourite settings, such as duration, temperature or heating function. They are available in the menu: Favourite Programme. You can save 20 programmes.

You cannot save Microwave and microwave combi functions as favourite programmes.

Saving a programme

1. Activate the appliance.
2. Set a heating function or an automatic programme.
3. Touch ⏲ again and again until the display shows: SAVE.
4. Press OK to confirm.

The display shows the first free memory position.

5. Press OK to confirm.
6. Enter the name of the programme. The first letter flashes.
7. Touch ∨ or ∧ to change the letter.
8. Press OK. The next letter flashes.
9. Do step 7 again as necessary.
10. Press and hold OK to save.

You can overwrite a memory position. When the display shows the first free memory position, touch ∨ or ∧ and press OK to overwrite an existing programme.

You can change the name of a programme in the menu: Edit Programme Name.

Activating the programme

1. Activate the appliance.
2. Select the menu: Favourite Programme.
3. Press OK to confirm.
4. Select your favourite programme name.
5. Press OK to confirm.

11.2 Using the Child Lock

When the Child Lock is on, the appliance cannot be activated accidentally.

1. Touch ⏻ to activate the display.
2. Touch ◷ and ≋ at the same time until the display shows a message.

To deactivate the Child Lock function repeat step 2.

11.3 Function Lock

This function prevents an accidental change of the heating function. You can activate it only when the appliance operates.

1. Activate the appliance.
2. Set a heating function or setting.
3. Press ◷ again and again until the display shows: Function Lock.
4. Press OK to confirm.

To deactivate the function, press ◷. The display shows a message. Press ◷ again and then OK to confirm.

ⓘ When you deactivate the appliance, the function also deactivates.

11.4 Set + Go

The function lets you set a heating function (or a programme) and use it later with one press of any symbol.

1. Activate the appliance.
2. Set a heating function.
3. Press ◷ again and again until the display shows: Duration.
4. Set the time.
5. Press ◷ again and again until the display shows: Set + Go.
6. Press OK to confirm.

Press any symbol (except for ⏻) to start the function: Set + Go. The set heating function starts.

When the heating function ends, an acoustic signal sounds.

ⓘ
- Function Lock is on when the heating function operates.
- The menu: Basic Settings lets you activate and deactivate the function: Set + Go.

11.5 Automatic Switch-off

For safety reasons the appliance deactivates automatically after some time if a heating function operates and you do not change any settings.

Temperature (°C)	Switch-off time (h)
30 - 115	12.5
120 - 195	8.5
200 - 230	5.5

The Automatic switch-off does not work with the functions: Light, End Time, Duration.

11.6 Brightness of the display

There are two modes of display brightness:

- Night brightness - when the appliance is deactivated, the brightness of the display is lower between 10 PM and 6 AM.
- Day brightness:
  - when the appliance is activated.
  - if you touch a symbol during the night brightness (apart from ON / OFF), the display goes back to the day brightness mode for the next 10 seconds.
  - if the appliance is deactivated and you set the function: Minute Minder. When the function ends, the display goes back to the night brightness.

11.7 Cooling fan

When the appliance operates, the cooling fan activates automatically to keep the surfaces of the appliance cool. If you deactivate the appliance, the cooling fan can continue to operate until the appliance cools down.

12. HINTS AND TIPS

WARNING!
Refer to Safety chapters.

The temperature and baking times in the tables are guidelines only. They depend on the recipes and the quality and quantity of the ingredients used.

12.1 Inner side of the door

In some models, on the inner side of the door you can find:

- the numbers of the shelf positions.
- information about the heating functions, recommended shelf positions and temperatures for typical dishes.

12.2 Advice for special heating functions of the oven

Keep Warm

Use this function if you want to keep food warm.

The temperature regulates itself automatically to 80 °C.

Plate Warming

For warming plates and dishes.

Distribute plates and dishes evenly on the wire shelf. Move stacks around after half of the warming time (swap top and bottom).

The automatic temperature is 70 °C.

Recommended shelf position: 3.

Dough Proving

You can use this automatic function with any recipe for yeast dough you like. It gives you a good atmosphere for rising. Put the dough into a dish that is big enough for rising and cover it with a wet towel or plastic foil. Insert a wire shelf on the first shelf position and put the dish in. Close the door and set the function: Dough Proving. Set the necessary time.

12.3 Baking

- Your oven may bake or roast differently to the appliance you had before. Adapt your usual settings (temperature, cooking times) and shelf positions to the values in the tables.
- The manufacturer recommends that you use the lower temperature the first time.

- If you cannot find the settings for a special recipe, look for the one that is almost the same.
- You can extend baking times by 10 – 15 minutes if you bake cakes on more than one shelf position.
- Cakes and pastries at different heights do not always brown equally at first. If this occurs, do not change the temperature setting. The differences equalize during the baking procedure.
- With longer baking times, you can deactivate the oven approximately 10 minutes before the end of the baking time and then use the residual heat.

When you cook frozen food, the trays in the oven can twist during baking. When the trays become cold again, the distortions are gone.

12.4 Tips on baking

Baking results	Possible cause	Remedy
The bottom of the cake is not browned sufficiently.	The shelf position is incorrect.	Put the cake on a lower shelf.
The cake sinks and becomes soggy, lumpy or streaky.	The oven temperature is too high.	The next time you bake, set a slightly lower oven temperature.
The cake sinks and becomes soggy, lumpy or streaky.	The baking time is too short.	Set a longer baking time. **You cannot decrease baking times by setting higher temperatures.**
The cake sinks and becomes soggy, lumpy or streaky.	There is too much liquid in the mixture.	Use less liquid. Be careful with mixing times, especially if you use a mixing machine.
The cake is too dry.	The oven temperature is too low.	The next time you bake, set a higher oven temperature.
The cake is too dry.	The baking time is too long.	The next time you bake, set a shorter baking time.
The cake browns unevenly.	The oven temperature is too high and the baking time is too short.	Set a lower oven temperature and a longer baking time.
The cake browns unevenly.	The mixture is unevenly distributed.	Spread the mixture evenly on the baking tray.
The cake is not ready in the baking time given.	The oven temperature is too low.	The next time you bake, set a slightly higher oven temperature.

12.5 Baking on one oven level

Baking in tins

Food	Function	Temperature (°C)	Time (min)	Shelf position
Ring cake or brioche	True Fan Cooking	150 - 160	50 - 70	2
Madeira cake / Fruit cakes	True Fan Cooking	140 - 160	70 - 90	2
Sponge cake / Sponge cake	True Fan Cooking	140 - 150	35 - 50	2
Sponge cake / Sponge cake	Conventional Cooking	160	35 - 50	2
Flan base - short pastry[1)]	True Fan Cooking	170 - 180	10 - 25	2
Flan base - sponge mixture	True Fan Cooking	150 - 170	20 - 25	2
Apple pie / Apple pie (2 tins Ø 20 cm, diagonally off set)	True Fan Cooking	160	70 - 90	2
Apple pie / Apple pie (2 tins Ø 20 cm, diagonally off set)	Conventional Cooking	180	70 - 90	1
Cheesecake, tray[2)]	Conventional Cooking	160 - 170	60 - 90	1

1) Preheat the oven.

2) Use a deep pan.

Cakes / pastries / breads on baking trays

Food	Function	Temperature (°C)	Time (min)	Shelf position
Plaited bread / bread crown	Conventional Cooking	170 - 190	30 - 40	2
Christmas stollen[1)]	Conventional Cooking	160 - 180	50 - 70	2
Bread (rye bread)[1)]	Conventional Cooking			2
first		230	20	
then		160 - 180	30 - 60	
Cream puffs / Eclairs[1)]	Conventional Cooking	190 - 210	20 - 35	2

Food	Function	Temperature (°C)	Time (min)	Shelf position
Swiss Roll[1)]	Conventional Cooking	180 - 200	10 - 20	2
Cake with crumble topping (dry)	True Fan Cooking	150 - 160	20 - 40	3
Buttered almond cake / sugar cakes[1)]	Conventional Cooking	190 - 210	20 - 30	2
Fruit flans (made with yeast dough / sponge mixture)[2)]	True Fan Cooking	150 - 160	35 - 55	3
Fruit flans (made with yeast dough / sponge mixture)[2)]	Conventional Cooking	170	35 - 55	1
Fruit flans made with short pastry	True Fan Cooking	160 - 170	40 - 80	3
Yeast cakes with delicate toppings (e.g. quark, cream, custard)[1)]	Conventional Cooking	160 - 180	40 - 80	2

[1)] Preheat the oven.

[2)] Use a deep pan.

Biscuits

Food	Function	Temperature (°C)	Time (min)	Shelf position
Short pastry biscuits	True Fan Cooking	150 - 160	10 - 20	3
Short bread / Short bread / Pastry Stripes	True Fan Cooking	140	20 - 35	3
Short bread / Short bread / Pastry Stripes[1)]	Conventional Cooking	160	20 - 30	2
Biscuits made with sponge mixture	True Fan Cooking	150 - 160	15 - 20	2
Pastries made with egg white, meringues	True Fan Cooking	80 - 100	120 - 150	1
Macaroons	True Fan Cooking	100 - 120	30 - 50	3
Biscuits made with yeast dough	True Fan Cooking	150 - 160	20 - 40	3

Food	Function	Tempera-ture (°C)	Time (min)	Shelf posi-tion
Puff pastries[1)]	True Fan Cooking	170 - 180	20 - 30	3
Rolls[1)]	Conventional Cooking	190 - 210	10 - 25	2
Small cakes / Small cakes[1)]	True Fan Cooking	160	20 - 35	3
Small cakes / Small cakes[1)]	Conventional Cooking	170	20 - 35	2

1) Preheat the oven.

12.6 Bakes and gratins

Food	Function	Temperature (°C)	Time (min)	Shelf position
Pasta bake	Conventional Cooking	180 - 200	45 - 60	1
Lasagne	Conventional Cooking	180 - 200	25 - 40	1
Vegetables au gratin[1)]	Turbo Grilling	210 - 230	10 - 20	1
Baguettes top-ped with mel-ted cheese	True Fan Cook-ing	160 - 170	15 - 30	1
Sweet bakes	Conventional Cooking	180 - 200	40 - 60	1
Fish bakes	Conventional Cooking	180 - 200	30 - 60	1
Stuffed vegeta-bles	True Fan Cook-ing	160 - 170	30 - 60	1

1) Preheat the oven.

12.7 Multilevel baking

Use the function: True Fan Cooking.

Cakes / pastries / breads on baking trays

Food	Temperature (°C)	Time (min)	Shelf position
Cream puffs / Eclairs[1)]	160 - 180	25 - 45	1 / 3
Dry streusel cake	150 - 160	30 - 45	1 / 3

[1)] Preheat the oven.

Biscuits / small cakes / pastries / rolls

Food	Temperature (°C)	Time (min)	Shelf position
Short pastry biscuits	150 - 160	20 - 40	1 / 3
Short bread / Short bread / Pastry Stripes	140	25 - 45	1 / 3
Biscuits made with sponge mixture	160 - 170	25 - 40	1 / 3
Pastries made with egg white, meringues	80 - 100	130 - 170	1 / 3
Macaroons	100 - 120	40 - 80	1 / 3
Biscuits made with yeast dough	160 - 170	30 - 60	1 / 3

12.8 Slow Cooking

Use this function to prepare lean, tender pieces of meat and fish. This function is not applicable to such recipes as pot roast or fatty roast pork.

In the first 10 minutes you can set an oven temperature between 80 °C and 150 °C. The default is 90 °C. After the temperature is set, the oven continues to cook at 80 °C. Do not use this function for poultry.

Always cook without a lid when you use this function.

1. Sear the meat in a pan on the hob on a very high setting for 1 - 2 minutes on each side.
2. Put the meat together with the hot roasting pan on the wire shelf in the oven.
3. Select the function: Slow Cooking.

Food	Quantity (kg)	Temperature (°C)	Time (min)	Shelf position
Roast beef	1 - 1.5	150	120 - 150	1
Fillet of beef	1 - 1.5	150	90 - 110	1
Roast veal	1 - 1.5	150	120 - 150	1
Steak	0.2 - 0.3	120	20 - 40	1

12.9 Pizza Setting

Food	Temperature (°C)	Time (min)	Shelf position
Pizza (thin crust)[1)]	200 - 230	15 - 20	3
Pizza (with a lot of topping)[2)]	180 - 200	20 - 30	3
Tarts	180 - 200	40 - 55	3
Spinach flan	160 - 180	45 - 60	3
Quiche Lorraine (Savoury flan)	170 - 190	45 - 55	3
Swiss Flan	170 - 190	45 - 55	3
Cheesecake	140 - 160	60 - 90	3
Apple cake, covered	150 - 170	50 - 60	3
Vegetable pie	160 - 180	50 - 60	3
Unleavened bread[1)]	230	10 - 20	3
Puff pastry flan[1)]	160 - 180	45 - 55	3
Flammekuchen[1)]	230	12 - 20	3
Piroggen (Russian version of calzone)[1)]	180 - 200	15 - 25	3

1) Preheat the oven.
2) Use a deep pan.

12.10 Roasting

- Use heat-resistant ovenware to roast (refer to the instructions of the manufacturer).
- You can roast large roasting joints directly in the deep pan (if present) or on the wire shelf above the deep pan.
- Roast lean meats in the roasting tin with the lid. This keeps the meat more succulent.
- All types of meat that can be browned or have crackling can be roasted in the roasting tin without the lid.
- We recommend that you cook meat and fish weighing 1 kg and above in the appliance.
- To prevent the meat juices or fat from burning onto the pan, put some liquid into the deep pan.
- If necessary, turn the roast (after 1/2 - 2/3 of the cooking time).
- Baste large roasts and poultry with their juices several times during roasting. This gives better roasting results.
- You can deactivate the appliance approximately 10 minutes before the end of the roasting time, and use the residual heat.

12.11 Roasting tables

Beef

Food	Function	Quantity (kg)	Power (Watts)	Temperature (°C)	Time (min)	Shelf position
Pot roast	Conventional Cooking	1 - 1.5	200	230	60 - 80	1

Pork

Food	Function	Quantity (kg)	Power (Watts)	Temperature (°C)	Time (min)	Shelf position
Shoulder, neck, ham joint	Turbo Grilling	1 - 1.5	200	160 - 180	50 - 70	1
Meat loaf	Turbo Grilling	0.75 - 1	200	160 - 170	35 - 50	1
Pork knuckle (pre-cooked)	Turbo Grilling	0.75 - 1	200	150 - 170	60 - 75	1

Veal

Food	Function	Quantity (kg)	Power (Watts)	Temperature (°C)	Time (min)	Shelf position
Roast veal	Turbo Grilling	1	200	160 - 180	50 - 70	1
Knuckle of veal	Turbo Grilling	1.5 - 2	200	160 - 180	75 - 100	1

Lamb

Food	Function	Quantity (kg)	Power (Watts)	Temperature (°C)	Time (min)	Shelf position
Leg of lamb, roast lamb	Turbo Grilling	1 - 1.5	200	150 - 170	50 - 70	1

Poultry

Food	Function	Quantity (kg)	Power (Watts)	Temperature (°C)	Time (min)	Shelf position
Poultry portions	Turbo Grilling	0.2 - 0.25 each	200	200 - 220	20 - 35	1
Chicken half	Turbo Grilling	0.4 - 0.5 each	200	190 - 210	25 - 40	1

Food	Function	Quantity (kg)	Power (Watts)	Temperature (°C)	Time (min)	Shelf position
Chicken poulard	Turbo Grilling	1 - 1.5	200	190 - 210	30 - 45	1
Duck	Turbo Grilling	1.5 - 2	200	180 - 200	45 - 65	1

Fish (steamed)

Food	Function	Quantity (kg)	Power (Watts)	Temperature (°C)	Time (min)	Shelf position
Whole fish	Conventional Cooking	1 - 1.5	200	210 - 220	30 - 45	1

Dishes

Food	Function	Quantity (kg)	Power (Watts)	Temperature (°C)	Time (min)	Shelf position
Dishes sweet	True Fan Cooking	-	200	160 - 180	20 - 35	1
Savoury dishes with cooked ingredients (noodles, vegetables)	True Fan Cooking	-	400 - 600	160 - 180	20 - 45	1
Savoury dishes with raw ingredients (potatoes, vegetables)	True Fan Cooking	-	400 - 600	160 - 180	30 - 45	2

12.12 Grilling

- Always grill with the maximum temperature setting.
- Set the shelf into the shelf position as recommended in the grilling table.
- Always set the pan to collect the fat into the first shelf position.
- Grill only flat pieces of meat or fish.
- Always preheat the empty oven with the grill functions for 5 minutes.

CAUTION!
Always grill with the oven door closed.

Grilling

Food	Temperature (°C)	Time (min)		Shelf position
		1st side	2nd side	
Roast beef, medium	210 - 230	30 - 40	30 - 40	1
Filet of beef, medium	230	20 - 30	20 - 30	1
Back of pork	210 - 230	30 - 40	30 - 40	1
Back of veal	210 - 230	30 - 40	30 - 40	1
Back of lamb	210 - 230	25 - 35	20 - 35	1
Whole Fish, 500 - 1000 g	210 - 230	15 - 30	15 - 30	1

Fast Grilling

Food	Time (min)		Shelf position
	1st side	2nd side	
Burgers / Burgers	9 - 13	8 - 10	3
Pork fillet	10 - 12	6 - 10	2
Sausages	10 - 12	6 - 8	3
Fillet steaks / veal steaks	7 - 10	6 - 8	3
Toast / Toast	1 - 3	1 - 3	3
Toast with topping	6 - 8	-	2

12.13 Frozen foods

- Remove the food packaging. Put the food on a plate.
- Do not cover it with a bowl or a plate. This can extend the defrost time.

Food	Temperature (°C)	Time (min)	Shelf position
Pizza, frozen	200 - 220	15 - 25	3
Pizza American, frozen	190 - 210	20 - 25	3
Pizza, chilled	210 - 230	13 - 25	3
Pizza Snacks, frozen	180 - 200	15 - 30	3
French Fries, thin[1)]	210 - 230	20 - 30	3
French Fries, thick[1)]	210 - 230	25 - 35	3

Food	Temperature (°C)	Time (min)	Shelf position
Wedges / Croquettes[1)]	210 - 230	20 - 35	3
Hash Browns	210 - 230	20 - 30	3
Lasagne / Cannelloni, fresh	170 - 190	35 - 45	2
Lasagne / Cannelloni, frozen	160 - 180	40 - 60	2
Chicken Wings	190 - 210	20 - 30	3

1) Turn 2 or 3 times during roasting.

Frozen Ready Meals Table

Food	Function	Temperature (°C)	Time (min)	Shelf position
Frozen pizza[1)]	Conventional Cooking	as per manufacturer's instructions	as per manufacturer's instructions	2
Chips[2)] (300 - 600 g)	Conventional Cooking or Turbo Grilling	200 - 220	as per manufacturer's instructions	2
Baguettes[3)]	Conventional Cooking	as per manufacturer's instructions	as per manufacturer's instructions	2
Fruit cake	Conventional Cooking	as per manufacturer's instructions	as per manufacturer's instructions	2

1) Preheat the oven.
2) Turn 2 or 3 times during cooking.
3) Preheat the oven.

12.14 Defrost

- Remove the food packaging and put the food on a plate.
- Use the first shelf position from the bottom.
- Do not cover the food with a bowl or a plate, as this can extend the defrost time.

Food	Quantity	Defrosting time (min)	Further defrosting time (min)	Comments
Chicken	1 kg	100 - 140	20 - 30	Put the chicken on an upturned saucer in a big plate. Turn halfway through.
Meat	1 kg	100 - 140	20 - 30	Turn halfway through.
Meat	500 g	90 - 120	20 - 30	Turn halfway through.
Trout	150 g	25 - 35	10 - 15	-
Strawberries	300 g	30 - 40	10 - 20	-
Butter	250 g	30 - 40	10 - 15	-
Cream	2 x 200 g	80 - 100	10 - 15	Whip the cream when still slightly frozen in places.
Gateau	1.4 kg	60	60	-

12.15 Preserving

- Use only preserve jars of the same dimensions available on the market.
- Do not use jars with twist-off and bayonet type lids or metal tins.
- Use the first shelf from the bottom for this function.
- Put no more than six one-litre preserve jars on the baking tray.
- Fill the jars equally and close with a clamp.
- The jars cannot touch each other.
- Put approximately 1/2 litre of water into the baking tray to give sufficient moisture in the oven.
- When the liquid in the jars starts to simmer (after approximately 35 - 60 minutes with one-litre jars), stop the oven or decrease the temperature to 100 °C (see the table).

Soft fruit

Food	Temperature (°C)	Cooking time until simmering (min)	Continue to cook at 100 °C (min)
Strawberries / Blueberries / Raspberries / Ripe gooseberries	160 - 170	35 - 45	-

Stone fruit

Food	Temperature (°C)	Cooking time until simmering (min)	Continue to cook at 100 °C (min)
Pears / Quinces / Plums	160 - 170	35 - 45	10 - 15

Vegetables

Food	Temperature (°C)	Cooking time until simmering (min)	Continue to cook at 100 °C (min)
Carrots[1)]	160 - 170	50 - 60	5 - 10
Cucumbers	160 - 170	50 - 60	-
Mixed pickles	160 - 170	50 - 60	5 - 10
Kohlrabi / Peas / Asparagus	160 - 170	50 - 60	15 - 20

[1)] Leave standing in the oven after it is deactivated.

12.16 Drying

Food	Temperature (°C)	Time (h)	Shelf position
Beans	60 - 70	6 - 8	3
Peppers	60 - 70	5 - 6	3
Vegetables for soup	60 - 70	5 - 6	3
Mushrooms	50 - 60	6 - 8	3
Herbs	40 - 50	2 - 3	3
Plums	60 - 70	8 - 10	3
Apricots	60 - 70	8 - 10	3
Apple slices	60 - 70	6 - 8	3
Pears	60 - 70	6 - 9	3

12.17 Bread Baking

Preheating is not recommended.

Food	Temperature (°C)	Time (min)	Shelf position
White Bread	180 - 200	40 - 60	2
Baguette	200 - 220	35 - 45	2
Brioche	160 - 180	40 - 60	2
Ciabatta	200 - 220	35 - 45	2
Rye Bread	180 - 200	50 - 70	2
Dark Bread	180 - 200	50 - 70	2
All Grain bread	170 - 190	60 - 90	2

12.18 Microwave cooking tables

Place your food on the plate or in a container on the cavity bottom if not specified differently.

Defrosting meat

Food	Power (Watts)	Quantity (kg)	Time (min)	Standing time (min)	Comments
Whole cuts of meat	200	0.5	10 - 12	10 - 15	Turn halfway through.
Steak	200	0.2	3 - 5	5 - 10	Turn halfway through, remove defrosted parts.
Mixed minced meat	200	0.5	10 - 15	10 - 15	Turn halfway through, remove defrosted parts.
Goulash	200	0.5	10 - 15	10 - 15	Turn halfway through, remove defrosted parts.

Defrosting poultry

Food	Power (Watts)	Quantity (kg)	Time (min)	Standing time (min)	Comments
Chicken	200	1	25 - 30	10 - 20	Turn halfway through, cover defrosted parts with aluminium foil.
Chicken breast	200	0.1 - 0.2	3 - 5	10 - 15	Turn halfway through, cover defrosted parts with aluminium foil.

Food	Power (Watts)	Quantity (kg)	Time (min)	Standing time (min)	Comments
Chicken thighs	200	0.1 - 0.2	3 - 5	10 - 15	Turn halfway through, cover defrosted parts with aluminium foil.
Duck	200	2	45 - 60	20 - 30	Turn halfway through, cover defrosted parts with aluminium foil.

Defrosting fish

Food	Power (Watts)	Quantity (kg)	Time (min)	Standing time (min)	Comments
Whole Fish	100	0.5	10 - 15	15 - 20	Turn halfway through.
Fish fillets	100	0.5	10 - 12	15 - 20	Turn halfway through.

Defrosting sausage

Food	Power (Watts)	Quantity (kg)	Time (min)	Standing time (min)	Comments
Sliced sausage	100	0.1	2 - 4	20 - 40	Turn halfway through.

Defrosting dairy products

Food	Power (Watts)	Quantity (kg)	Time (min)	Standing time (min)	Comments
Quark	100	0.25	10 - 15	25 - 30	Remove aluminium parts, turn halfway through.
Butter	100	0.25	3 - 5	15 - 20	Remove aluminium parts, turn halfway through.

Food	Power (Watts)	Quantity (kg)	Time (min)	Standing time (min)	Comments
Cheese	100	0.25	3 - 5	30 - 60	Remove aluminium parts, turn halfway through.
Cream	100	0.2	7 - 12	20 - 30	Remove aluminium top, stir halfway through.

Defrosting cakes / pastries

Food	Power (Watts)	Quantity	Time (min)	Standing time (min)	Comments
Yeast dough	100	1 piece	2 - 3	15 - 20	Turn plate halfway through.
Cheesecake	100	1 piece	2 - 4	15 - 20	Turn plate halfway through.
Cake (gateau)	100	1 piece	1 - 2	15 - 20	Turn plate halfway through.
Dry cake (e. g. Pound cake)	100	1 piece	2 - 4	15 - 20	Turn plate halfway through.
Fruit cake	100	1 piece	1 - 2	15 - 20	Turn plate halfway through.
Bread	100	1 kg	15 - 20	10 - 15	Turn halfway through.
Sliced bread	100	0.5 kg	8 - 12	10 - 15	Turn halfway through.
Bread rolls	100	4 rolls	5 - 8	5 - 10	Turn halfway through.

Defrosting fruit

Food	Power (Watts)	Quantity (kg)	Time (min)	Standing time (min)	Comments
Strawberries	100	0.3	8 - 12	10 - 15	Defrost covered, stir halfway through.

Food	Power (Watts)	Quantity (kg)	Time (min)	Standing time (min)	Comments
Plums, cherries, raspberries, blackcurrants, apricots	100	0.25	8 - 10	10 - 15	Defrost covered, stir halfway through.

Cooking / melting

Food	Power (Watts)	Quantity (kg)	Time (min)	Standing time (min)	Comments
Chocolate / Chocolate coating	600	0.15	2 - 3	-	Stir halfway through.
Butter	200	0.1	2 - 4	-	Stir halfway through.

Defrosting heating

Food	Power (Watts)	Quantity	Time (min)	Standing time (min)	Comments
Baby food in jars	300	0.2 kg	2 - 3	-	Stir halfway through, check temperature.
Baby milk (bottle, 180 ml)	1000	0.2 kg	0:20 - 0:40	-	Put spoon into bottle, stir and check temperature.
Convenience food	600	0.4 - 0.5 kg	14 - 20	5	Remove any aluminium lids, turn halfway through.
Frozen ready meals	400	0.4 - 0.5 kg	4 - 6	5	Remove any aluminium lids, turn halfway through.
Milk	1000	1 cup approx. 200 ml	1:15 - 1:45	-	Put spoon in the container.
Water	1000	1 cup approx. 200 ml	1:30 - 2	-	Put spoon in the container.

Food	Power (Watts)	Quantity	Time (min)	Standing time (min)	Comments
Sauce	600	200 ml	1 - 2	-	Stir halfway through.
Soup	600	300 ml	2 - 4	-	Stir halfway through.

Cooking table

Food	Power (Watts)	Quantity	Time (min)	Standing time (min)	Comments
Whole fish	500	0.5 kg	8 - 10	-	Cook covered, turn container several times during cooking.
Fish fillets	500	0.5 kg	6 - 8	-	Cook covered, turn container several times during cooking.
Vegetables, short cooking time, fresh[1)]	600	0.5 kg	12 - 16	-	Add approx. 50 ml water, cook covered, stir halfway through.
Vegetables, short cooking time, frozen[1)]	600	0.5 kg	14 - 18	-	Add approx. 50 ml water, cook covered, stir halfway through.
Vegetables, long cooking time, fresh[1)]	600	0.5 kg	14 - 20	-	Add approx. 50 ml water, cook covered, stir halfway through.
Vegetables, long cooking time, frozen[1)]	600	0.5 kg	18 - 24	-	Add approx. 50 ml water, cook covered, stir halfway through.

Food	Power (Watts)	Quantity	Time (min)	Standing time (min)	Comments
Potatoes in their jacket	1000	0.8 kg + 600 ml	5 - 7	300 W / 15 - 20	Cook covered, stir halfway through.
Rice	1000	0.3 kg + 600 ml	4 - 6	-	Cook covered, stir halfway through.
Popcorn	1000	-	3 - 4	-	Put the popcorn on a plate on the bottom level.

1) Cook all vegetables with a cover on the container.

Combi-function table

- For selected models only.
- Use the functions: Grilling and Microwave.

Food	Ovenware	Power (Watts)	Temperature (°C)	Time (min)	Shelf position	Comments
2 chicken halves (2 x 0.6 kg)	Glass dish with strainer	300	220	40	2	Turn after 20 min, standing time 5 min.
au gratin potatoes (1 kg)	Gratin dish	300	200	40	2	10 min standing time.
Roast pork neck (1.1 kg)	Glass dish with strainer	300	200	70	1	Turn in between, 10 min standing time.

13. CARE AND CLEANING

WARNING!
Refer to Safety chapters.

13.1 Notes on cleaning

- Clean the front of the appliance with a soft cloth with warm water and a cleaning agent.
- To clean metal surfaces, use a dedicated cleaning agent.
- Clean the appliance interior after each use. Fat accumulation or other food remains may result in a fire.
- Clean the cavity roof carefully from food residuals and fat.
- Clean stubborn dirt with a special oven cleaner.
- Clean all accessories after each use and let them dry. Use a soft cloth with warm water and a cleaning agent.

- If you have nonstick accessories, do not clean them using aggressive agents, sharp-edged objects or a dishwasher. It can cause damage to the nonstick coating.
- Dry the oven when the cavity is wet after usage.

13.2 Removing the shelf supports

Before maintenance, make sure that the appliance is cool. There is a risk of burns.

To clean the appliance, remove the shelf supports.

1. Pull carefully the supports up and out of the front catch.

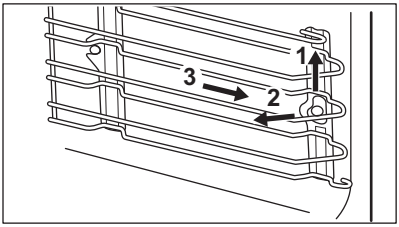

2. Pull the front end of the shelf support away from the side wall.
3. Pull the supports out of the rear catch.

Install the shelf supports in the opposite sequence.

13.3 Replacing the lamp

Put a cloth on the bottom of the interior of the appliance. It prevents damage to the lamp glass cover and the cavity.

WARNING!
Danger of electrocution!
Disconnect the fuse before you replace the lamp.
The lamp and the lamp glass cover can be hot.

CAUTION!
Always hold the halogen lamp with a cloth to prevent grease residue from burning on the lamp.

1. Deactivate the appliance.
2. Remove the fuses from the fuse box or deactivate the circuit breaker.

The top lamp

1. Turn the lamp glass cover counterclockwise to remove it.
2. Clean the glass cover.
3. Replace the lamp with a suitable 300 °C heat-resistant lamp.
4. Install the glass cover.

14. TROUBLESHOOTING

WARNING!
Refer to Safety chapters.

14.1 What to do if...

Problem	Possible cause	Remedy
You cannot activate or operate the oven.	The oven is not connected to an electrical supply or it is connected incorrectly.	Check if the oven is correctly connected to the electrical supply (refer to the connection diagram if available).
The oven does not heat up.	The oven is deactivated.	Activate the oven.
The oven does not heat up.	The clock is not set.	Set the clock.

Problem	Possible cause	Remedy
The oven does not heat up.	The necessary settings are not set.	Make sure that the settings are correct.
The oven does not heat up.	The automatic switch-off is activated.	Refer to "Automatic switch-off".
The oven does not heat up.	The Child Lock is on.	Refer to "Using the Child Lock".
The oven does not heat up.	The door is not closed correctly.	Fully close the door.
The oven does not heat up.	The fuse is blown.	Make sure that the fuse is the cause of the malfunction. If the fuse is blown again and again, contact a qualified electrician.
The lamp does not operate.	The lamp is defective.	Replace the lamp.
The display shows an error code that is not in this table.	There is an electrical fault.	• Deactivate the oven with the house fuse or the safety switch in the fuse box and activate it again. • If the display shows the error code again, contact the Customer Care Department.
Steam and condensation settle on the food and in the cavity of the oven.	You left the dish in the oven for too long.	Do not leave the dishes in the oven for longer than 15 - 20 minutes after the cooking process ends.

14.2 Service data

If you cannot find a solution to the problem yourself, contact your dealer or an Authorised Service Centre.

The necessary data for the service centre is on the rating plate. The rating plate is on the front frame of the appliance cavity. Do not remove the rating plate from the appliance cavity.

We recommend that you write the data here:	
Model (MOD.)	.....
Product number (PNC)	.....
Serial number (S.N.)	.....

15. TECHNICAL DATA

15.1 Technical data

Voltage	220 - 240 V
Frequency	50 Hz

16. ENVIRONMENTAL CONCERNS

Recycle the materials with the symbol ♲. Put the packaging in applicable containers to recycle it. Help protect the environment and human health and to recycle waste of electrical and electronic appliances. Do not dispose appliances marked with the symbol with the household waste. Return the product to your local recycling facility or contact your municipal office.

www.electrolux.com/shop

867302162-E-342016